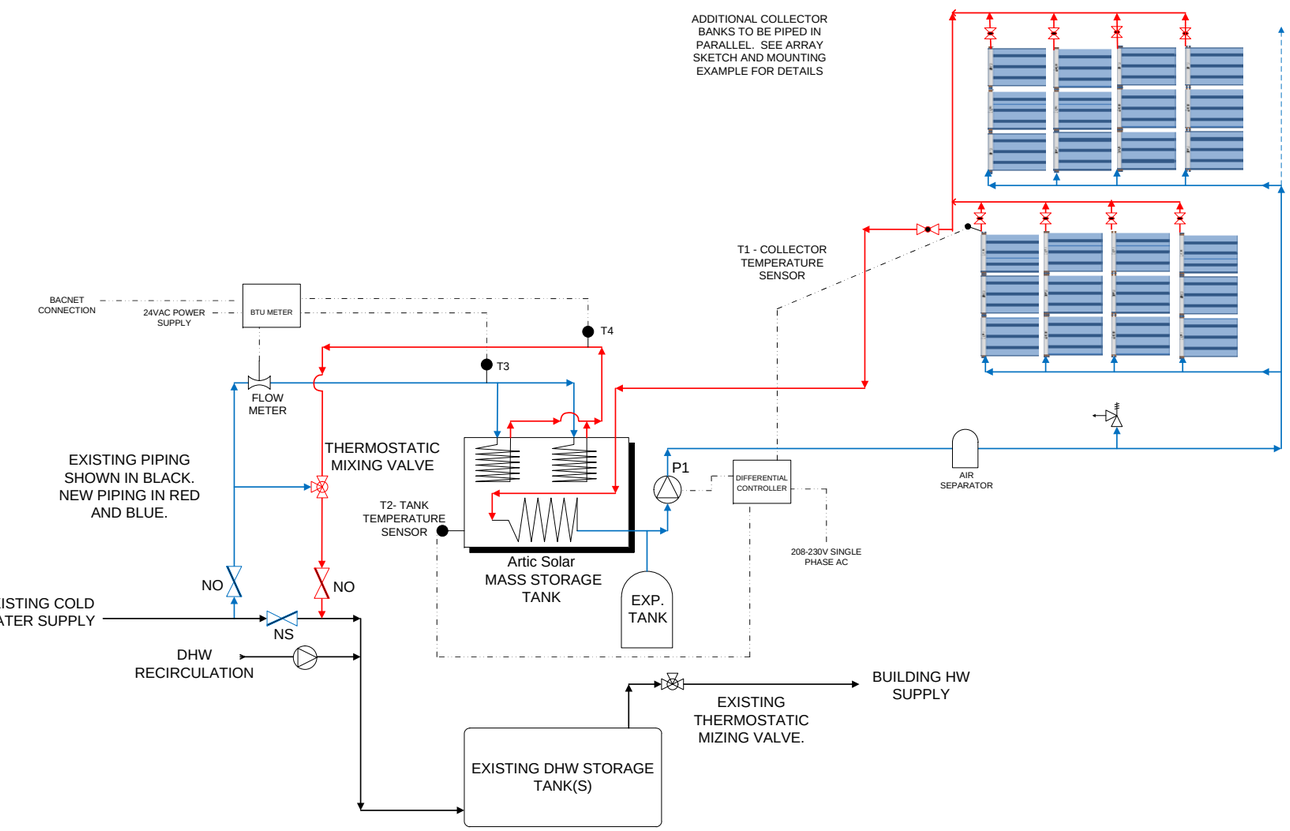

PRESSURIZED LOOP FLOW DIAGRAM

artic solar

250 Shawland Rd

Jacksonville, FL 32254

904-513-4638

SOLAR DOMESTIC HOT WATER PRESSURIZED WATER or GLYCOL

Scale: NTS

Revisions Issued

Rev:	Date:	Description:
0	4/20/12	Flow Diagram

Designed Date: 12-20-2014

Drawn: William Guiney Date: 09/16/2015

Account Executive: [Insert Name]

Proj Dev Engineer: [Insert Name]

Perf Ass Engineer: [Insert Name]

Project Manager: [Insert Name]

CONTRACT NUMBER

[Insert #]

DRAWING NUMBER

1